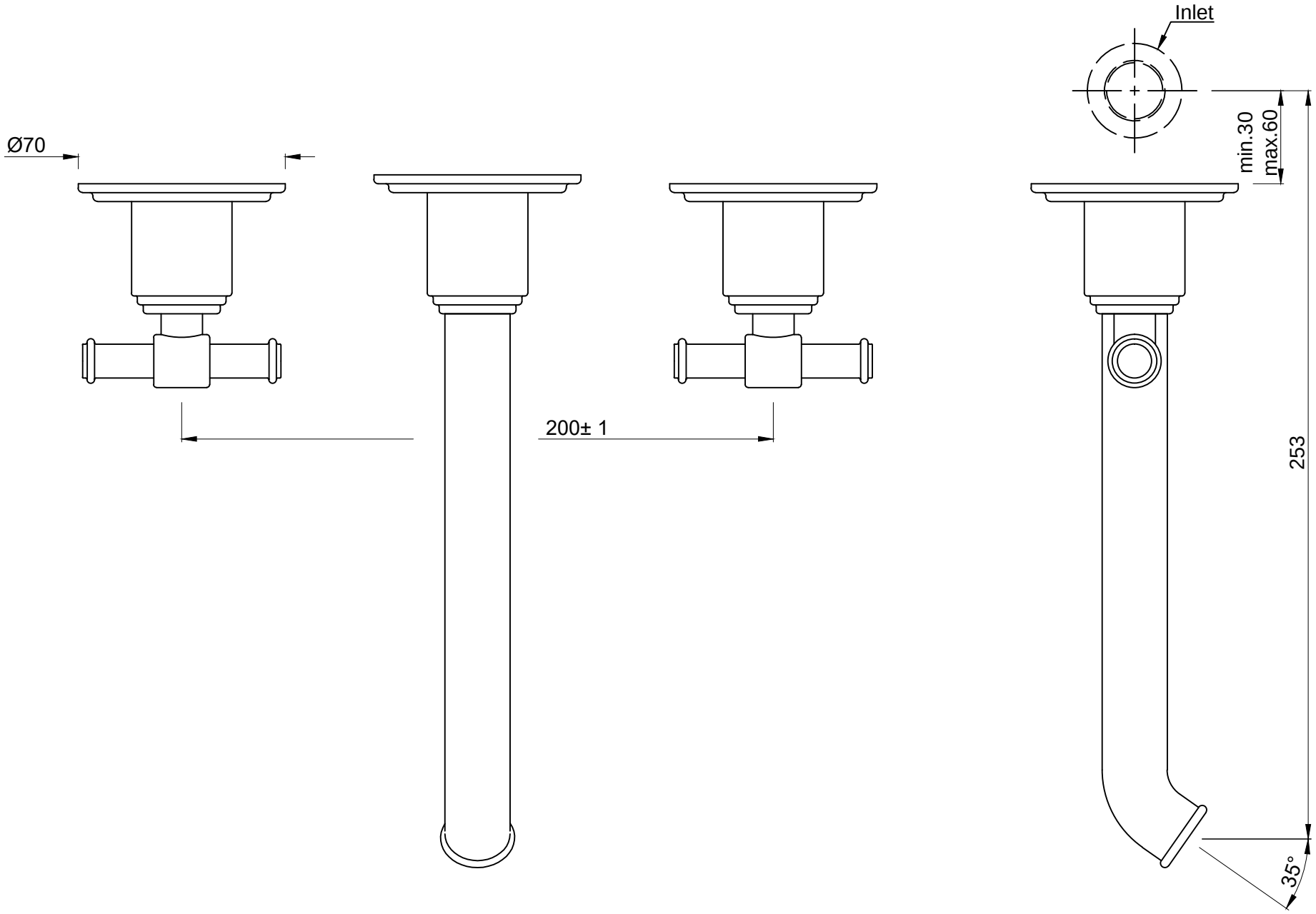Cat.No. VIC-503433K