artize.com

Artize

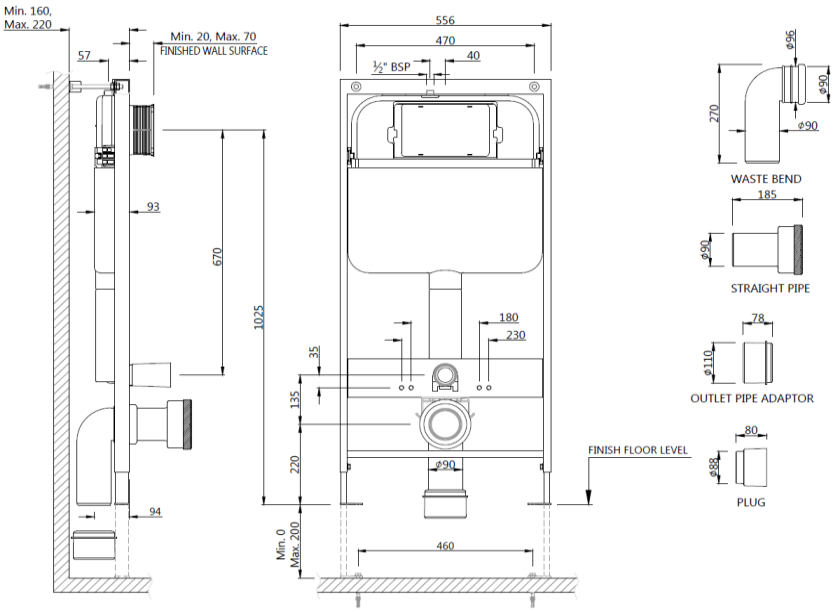

Product Code	APC-WHT-5012500FSAF
Description	Pneumatic Single Piece Slim In-wall Cistern With Auto Flushing System, Floor Mounting Frame, Installation Kit And “S-Type” Drain Pipe Connection Set For Wall Hung Wc (Without Control Plate) Compatible With Wc : IAS-79953BIPP (Sold As Seperate)
Flow Rate	3.0/6.0 LPF
Features	• **Tank body:** Strong 80 mm thick High-density polyethylene (HDPE) ‘Single-piece’ body. • **Anti-Condensation Lining:** Anti condensation lining of 6mm thick wall takes care of temperature change. • **Inlet & Outlet Valves:** Inlet valve has a special rotary structure which gives out low noise & anti siphon function. Both valves (Inlet & outlet) are WARS approved. • **Working Pressure:** 0.3-10 bar (1.0 to 3.0 bar is recommended with clear, non-aggressive water supply) • **Life Cycles of Mechanism:** The lifetime of sea water test and dirty water test have passed 100,000 cycles • **Flush Control Plates:** Toughened glass with ABS made chome plated push buttons of control plates which is compatible for Single Piece Slim in-wall Cistern (APC-WHT-5012500FSAF) • **Adjustable Height:** Adjustable legs (0-200 mm) to allow for variation in heights of WC, as required • **Floor Mounted Frame:** oxford blue Powder coated steel frame, self-supporting test on 400Kg load bearing capacity. • **Water inlet:** ½” water supply connection from top. • **Flush volume:** Factory setting 6.0~3.0 litres, Eco adjustable: 4.0~2.0 litres (Only for WC pans designed for low volume flushing).
Application	• For installation of a wall-hung WC with bolt fixing set at 180 or 230 mm centres • For installation in a room high system well in front of a solid or drywall construction. • For installation in a load bearing stud wall.

DISCLAIMER: Our every effort has been made to ensure factual accuracy, the information presented subject to changes due to requirements in different sites, markets and/ or countries. 10% variation in flow rate may be possible. Jaquar reserves the right to make the necessary amendments at any time without prior notice.