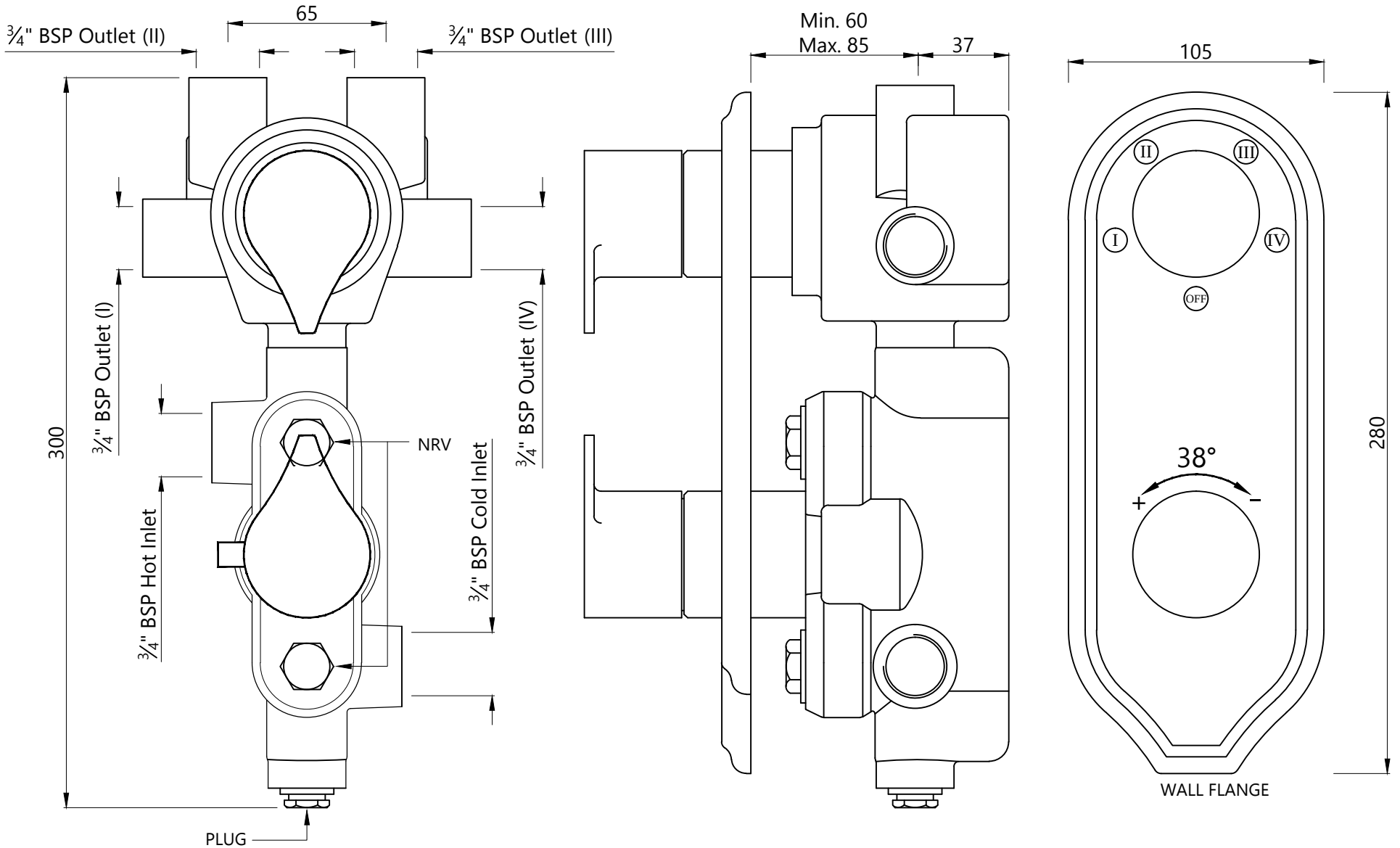TIAARA Concealed Thermostat with control unit for 4-Outlets and integrated Shut-off valve	Cat. No.-TIA-73685N